JEFFERSON CONCRETE CORP.

22850 COUNTY ROUTE 51
WATERTOWN, NY 13601
TEL (315)788-4171 FAX (315)788-7958
www.jeffersonconcrete.com

68" - 1,000 GALLON SEPTIC TANK

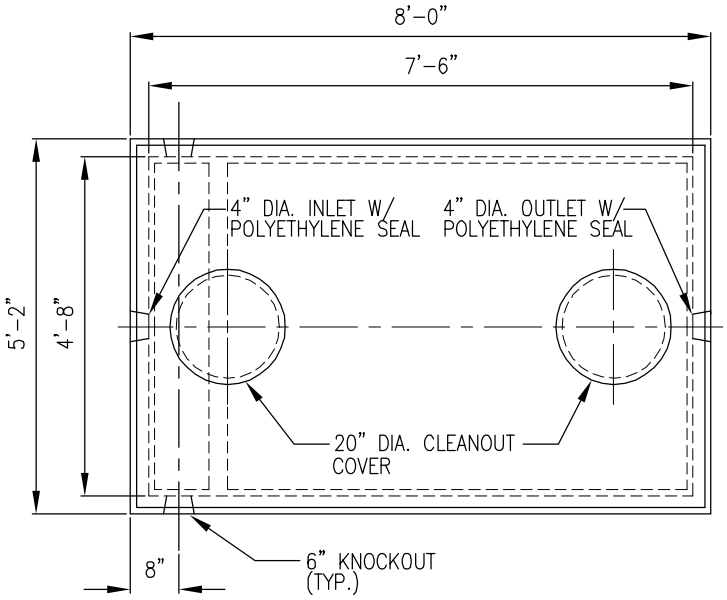

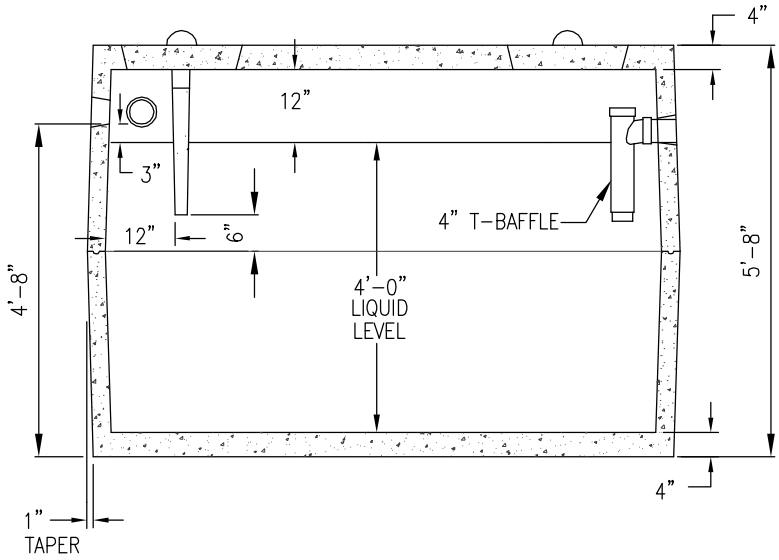

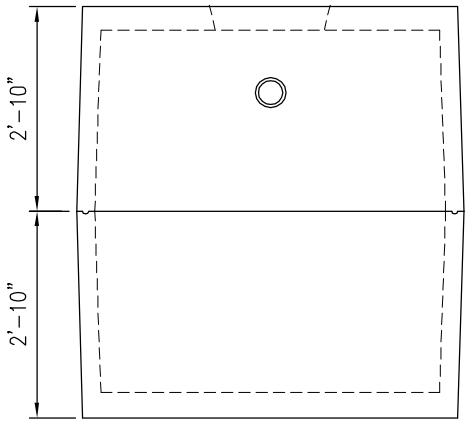

GENERAL NOTES:

CONCRETE TO BE MIN. 5000 PSI @28 DAYS
ENTRAINED AIR 5%-8%
STEEL REINFORCEMENT- ASTM A-615 GRADE 60
STEEL COVER MIN. 1"
BUILT IN ACCORDANCE TO ASTM C-1227/ C-913 (300 PSF)
T-BAFFLE CAN BE REPLACED FOR POLYLOK EFFLUENT FILTER
SIDE INLET NEED PIPE LOCATION FOR BAFFLE LOCATIONS

UPDATED 11/01/23