JEFFERSON CONCRETE CORP.

22850 MURROCK CIRCLE
WATERTOWN, NY 13601

TEL(315)788-4171 FAX(315)788-7958

PRODUCT DESCRIPTION
UF8B
750 - 2500 KVA
TRANSFORMER PAD & CURB

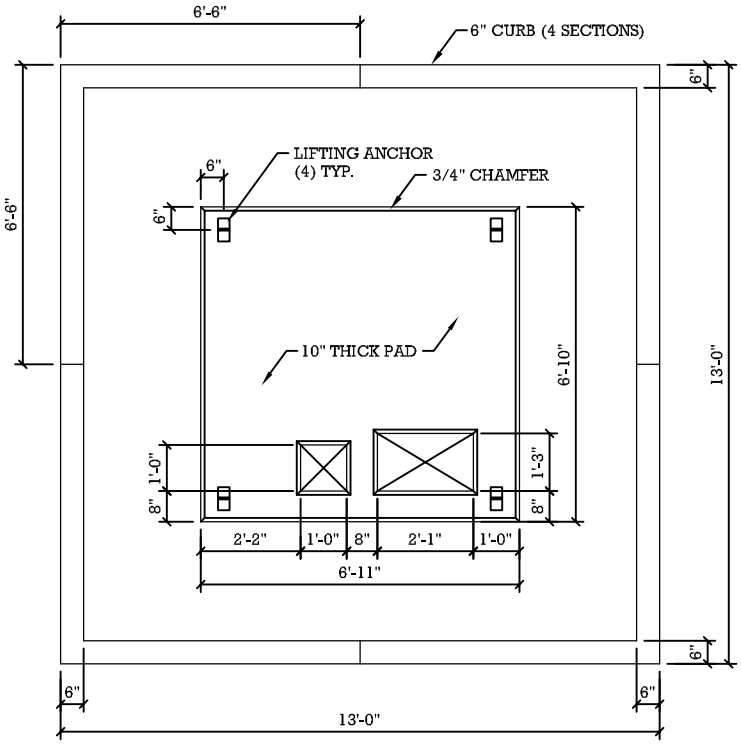

PLAN

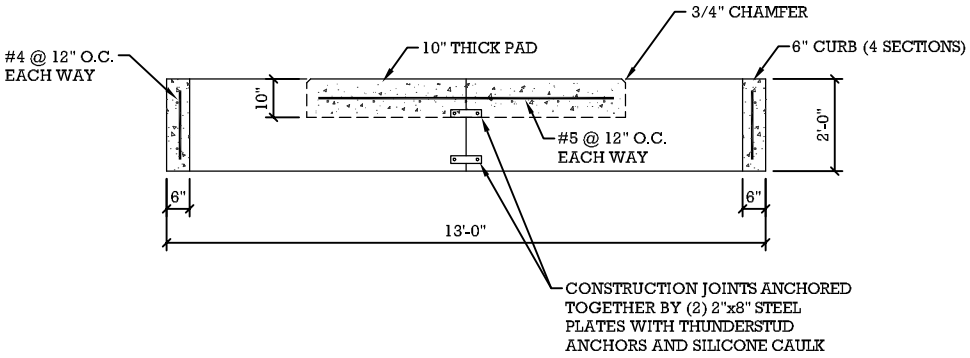

SECTION

NOTES:

1. CONCRETE TO BE MIN. 5,000 PSI MIN. @ 28 DAYS
2. AIR ENTRAINED 5% - 8%
3. STEEL REINFORCEMENT - ASTM A-615, A-497, GRADE 60

12/04/2009 WJL